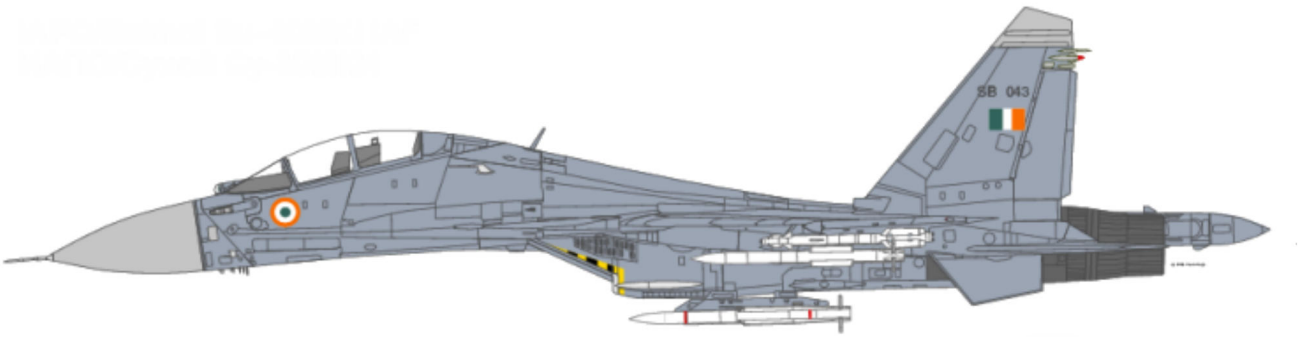

The **Sukhoi Su-30 MKI** (NATO reporting name **Flanker-H**) is a variant of the Sukhoi Su-30 jointly-developed by Russia's Sukhoi Corporation and India's Hindustan Aeronautics Limited (HAL) for the Indian Air Force (IAF). It is an air superiority fighter which can also act as a multirole, strike fighter jet.

The development of the variant started after India signed a deal with Russia in 2000 to manufacture 140 Su-30 fighter jets. The first Russian-made Su-30MKI variant was integrated into the IAF in 2002,while the first indigenous Su-30MKI entered service with the IAF in 2004.

Capable of carrying nuclear weapons and tailor-made for Indian specifications, the fighter jet integrates Indian systems and avionics. It also contains French and Israeli subsystems. The MKI variant features several improvements over the basic K and MK variants and is classified as a 4.5 generation fighter. Due to similar features and components, the MKI variant is often considered to be a customized Indian variant of the Sukhoi Su-35

The Su-30MKI version is a development of the Su-27 series. Though a variant of Su-30, the Su-30 MKI is more advanced than the basic Su-30 or the Chinese Su-30 MKK aircraft. Its avionics, aerodynamic features and components are similar to the Su-35.This variant has significant upgrades on it from the basic Su-30MK version.

The aircraft featured many modifications over the Su-27 and the Su-30MK variant. These included canard fore-planes, 2-dimensional thrust vectoring control (TVC), Russian-made N011-M passive phased array radar (PESA) and a range of avionics complex sourced from Russia, France, Israel and India which includes display, navigation, targeting and electronic warfare systems.

General characteristics

- **Crew:** 2
- **Length:** 21.935 m (72.97 ft)
- **Wingspan:** 14.7 m (48.2 ft)
- **Height:** 6.36 m (20.85 ft)
- **Wing area:** 62.0 m² (667 ft²)
- **Max takeoff weight:** 38,800 kg (85,600 lb)
- **Maximum speed: Mach 2.35**
- **powerplant:** 2× Lyulka AL-31FP

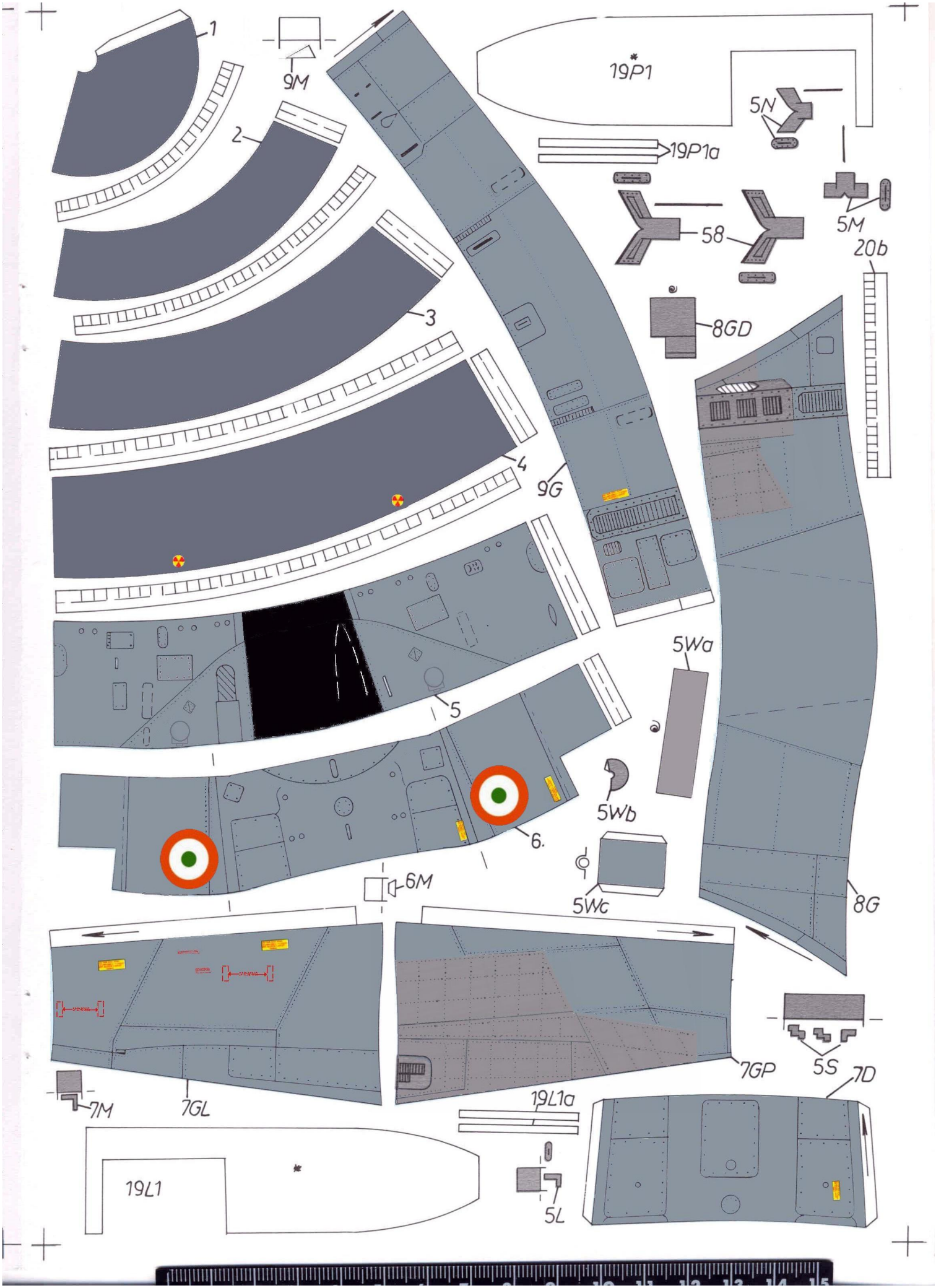
1
9M
2
3
4
9G
19P1
5N
19P1a
5M
58
20b
8GD
5
5Wa
5Wb
6.
6M
5Wc
8G
7GP
5S
7D
7M
7GL
19L1a
19L1
5L

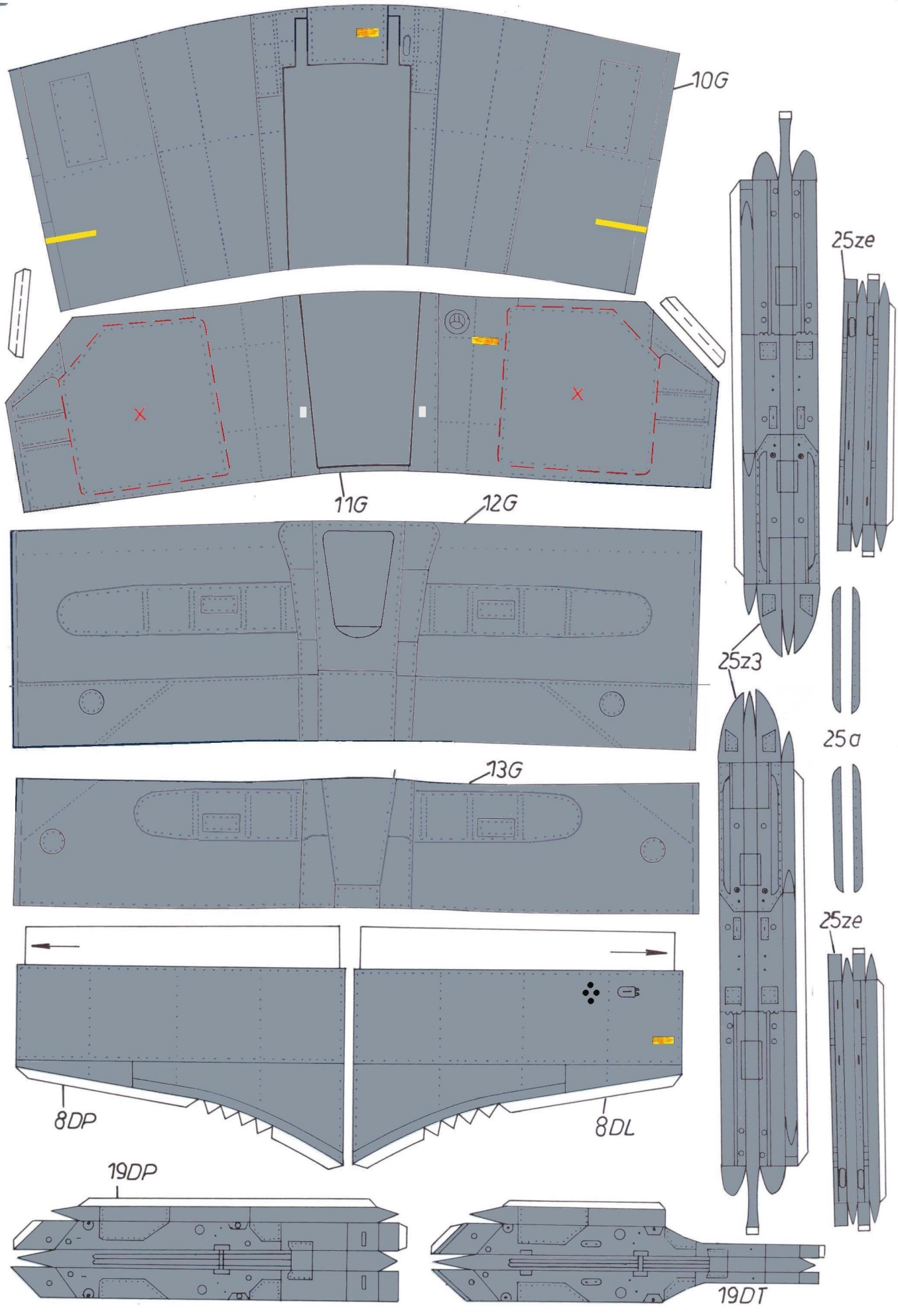
10G
25ze
11G
12G
25z3
25a
13G
25ze
8DP
8DL
19DP
19DT

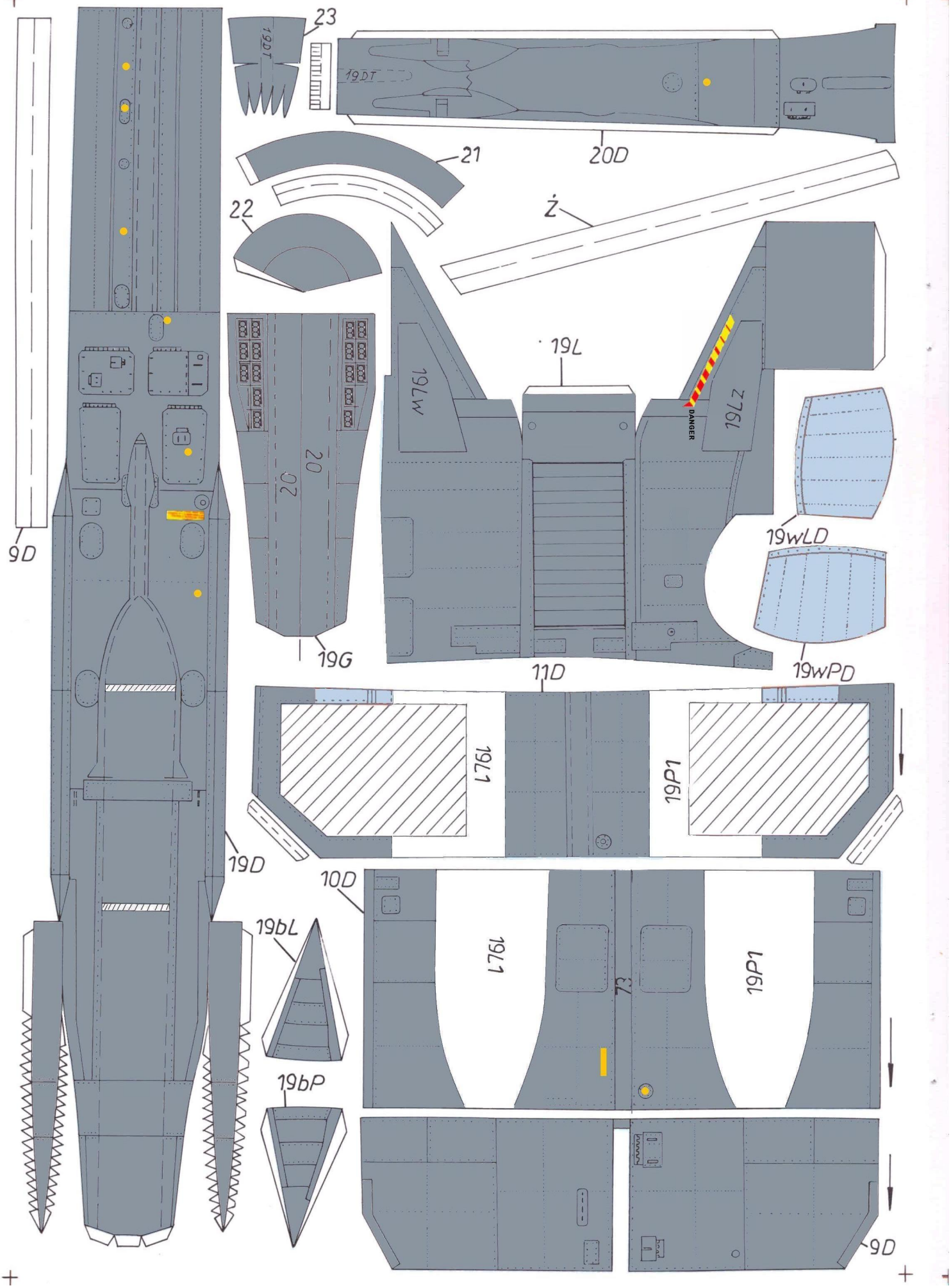
23
19DT
19DT
20D
21
22
Ż
19L
19Lw
19Lz
DANGER
19wLD
19wPD
20
20
19G
11D
19L1
19P1
19D
10D
19bL
19L1
19P1
19bP
9D
9D

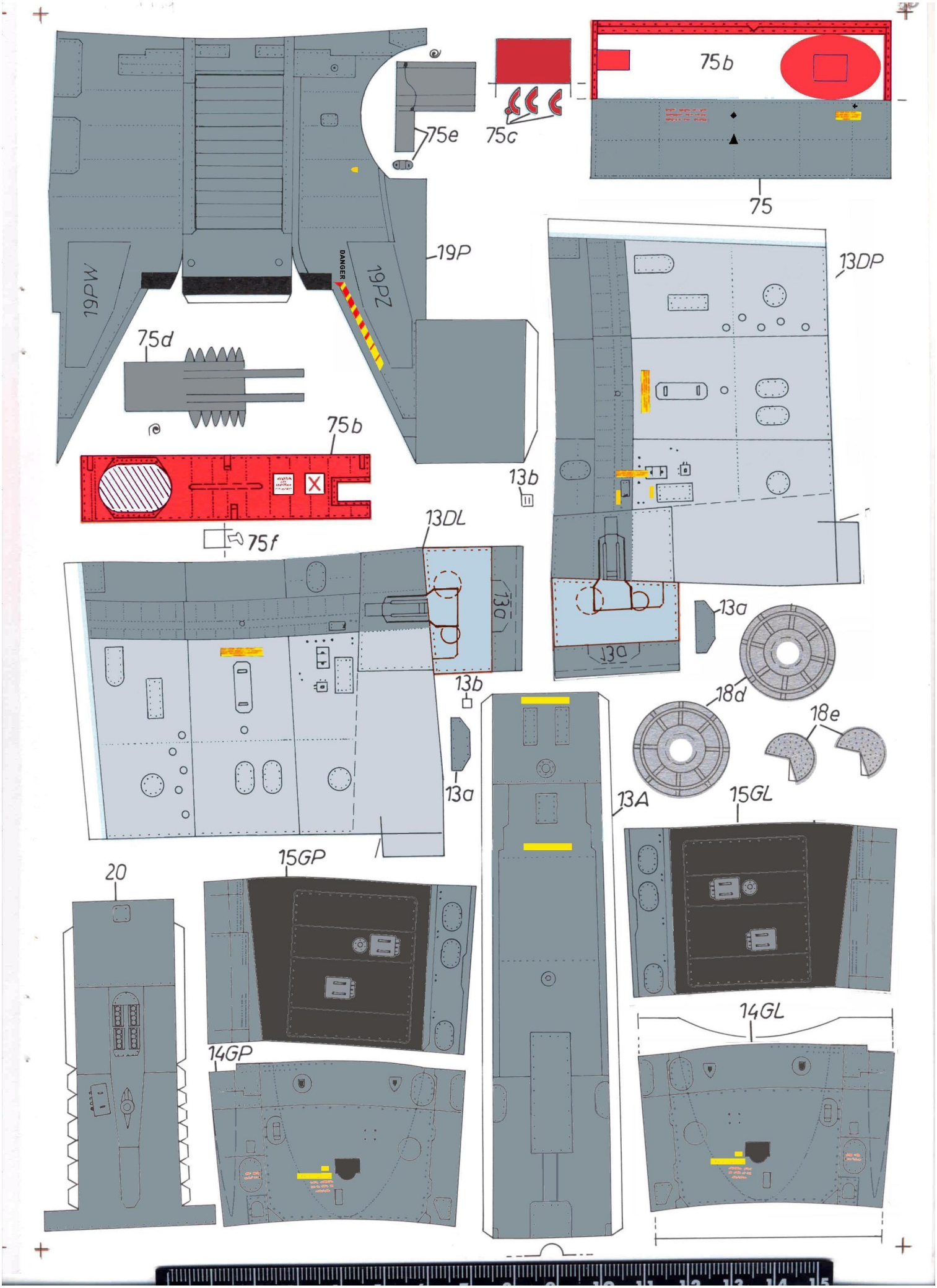
75e
75c
75b
75
19P
19PW
19PZ
DANGER
75d
75b
13b
13DP
13DL
75f
13a
13a
18d
18e
13b
13a
13A
15GL
20
15GP
14GP
14GL

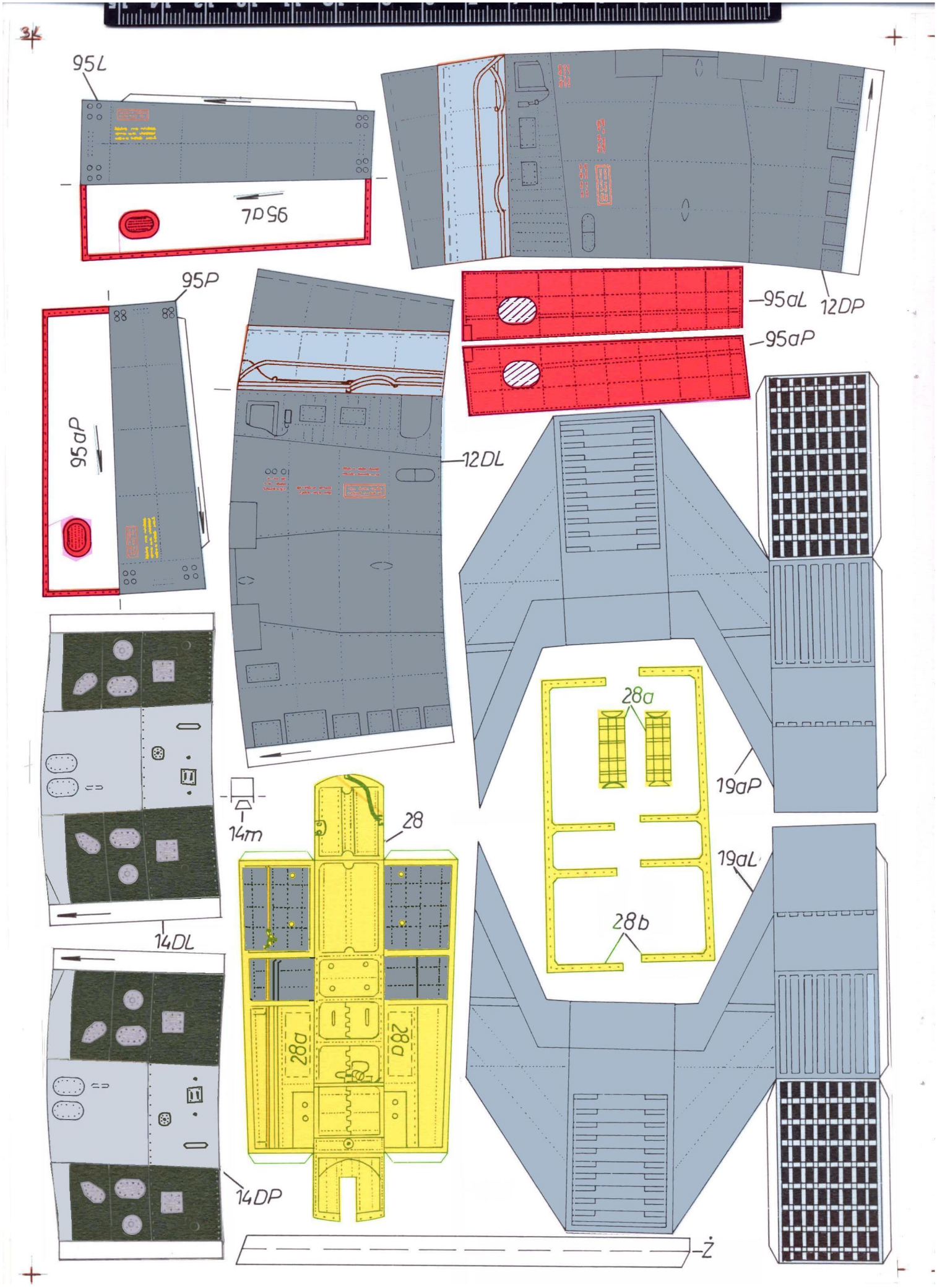

95L
95aL
95P
95aP
12DP
95aL
95aP
12DL
28a
19aP
14m
28
19aL
28b
14DL
28a
28a
14DP
Ż

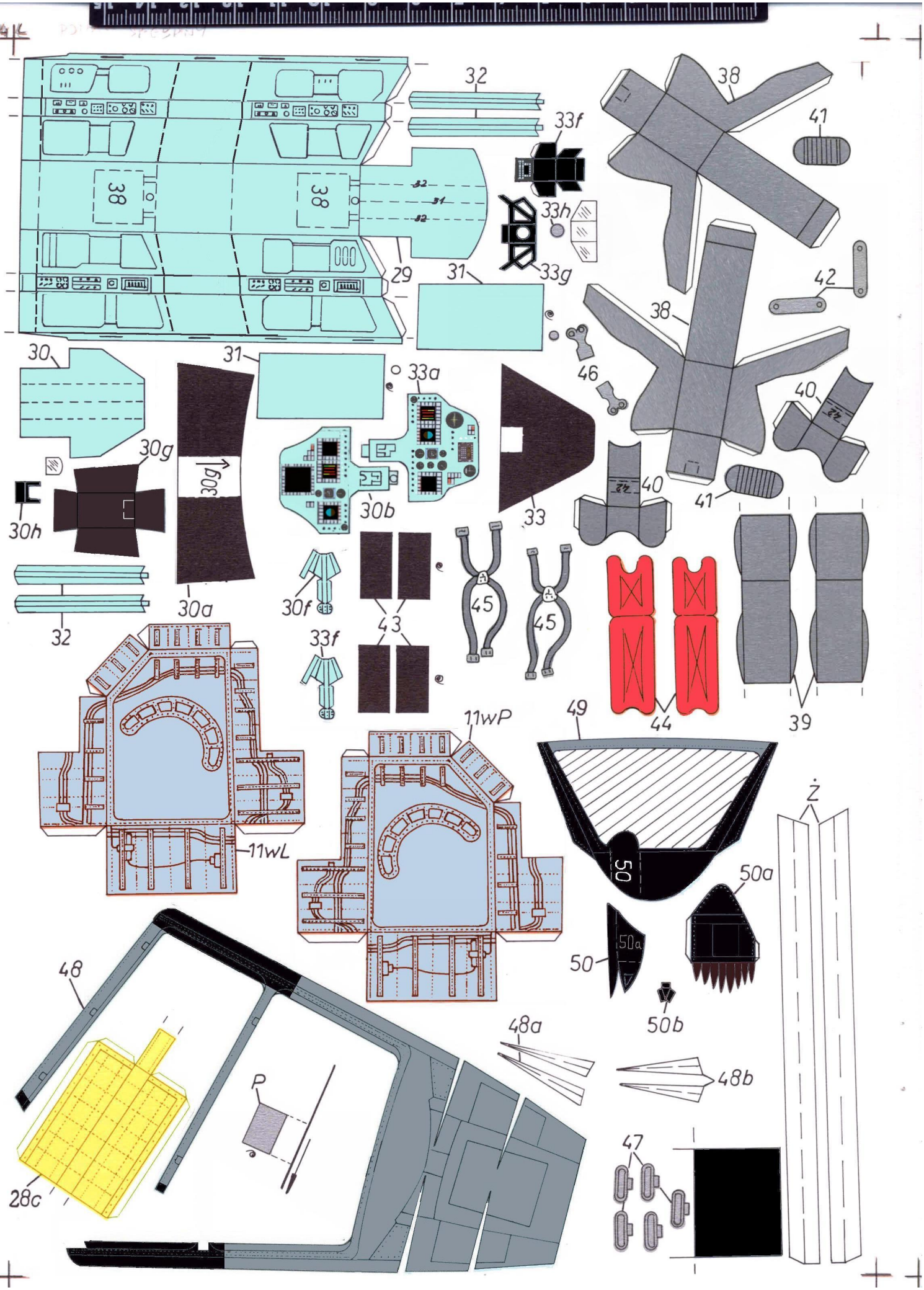

32
38
41
33f
33h
33g
29
31
42
38
46
30
31
33a
40
30g
30g
30b
33
40
41
30h
30a
30f
43
45
45
32
33f
44
39
11wP
49
11wL
Ż
50
50a
50
50a
50b
48
48a
48b
P
47
28c

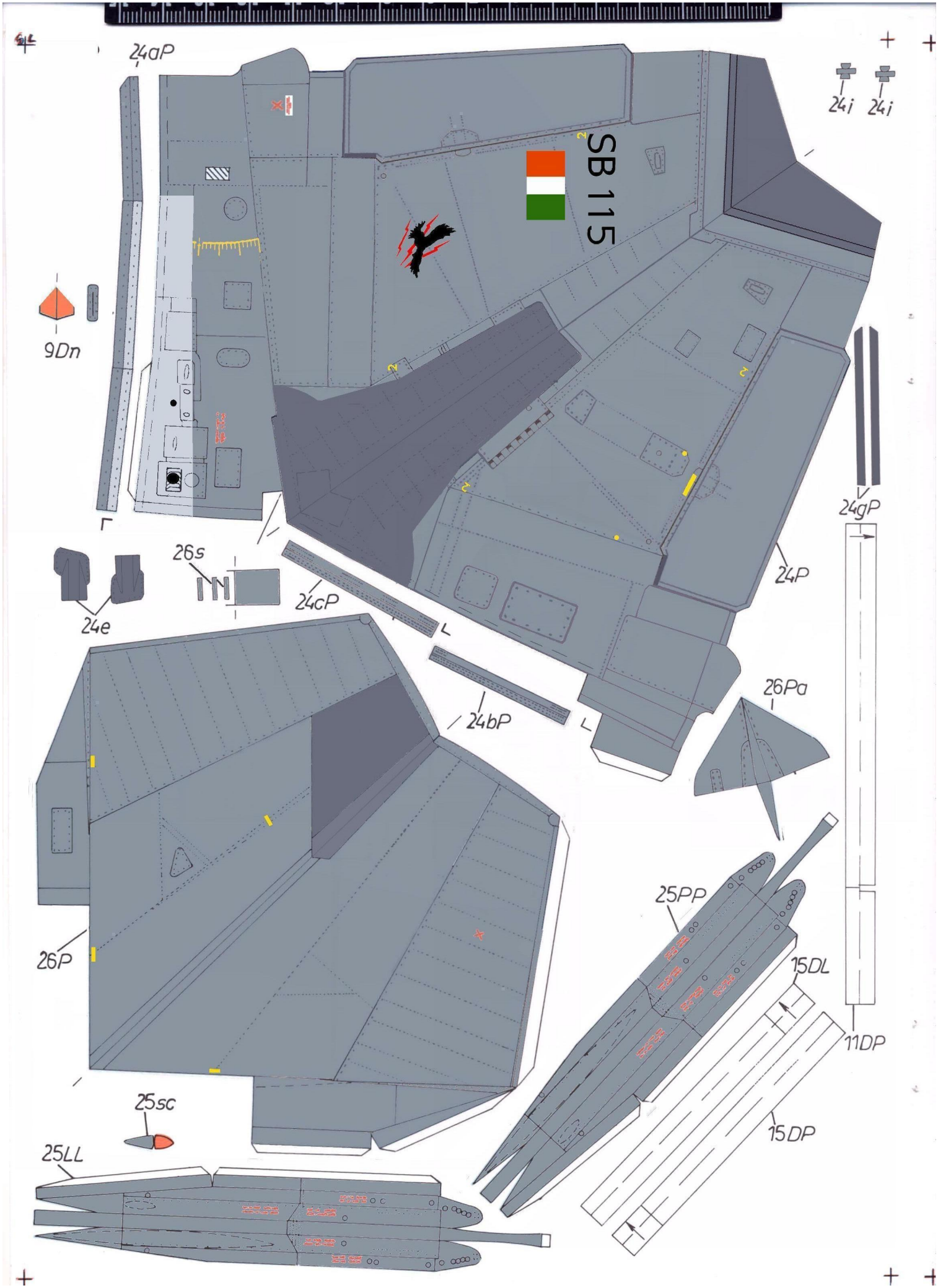
24aP
24i
24i
SB 115
9Dn
24gP
26s
24cP
24P
24e
24bP
26Pa
25PP
26P
15DL
11DP
25sc
15DP
25LL

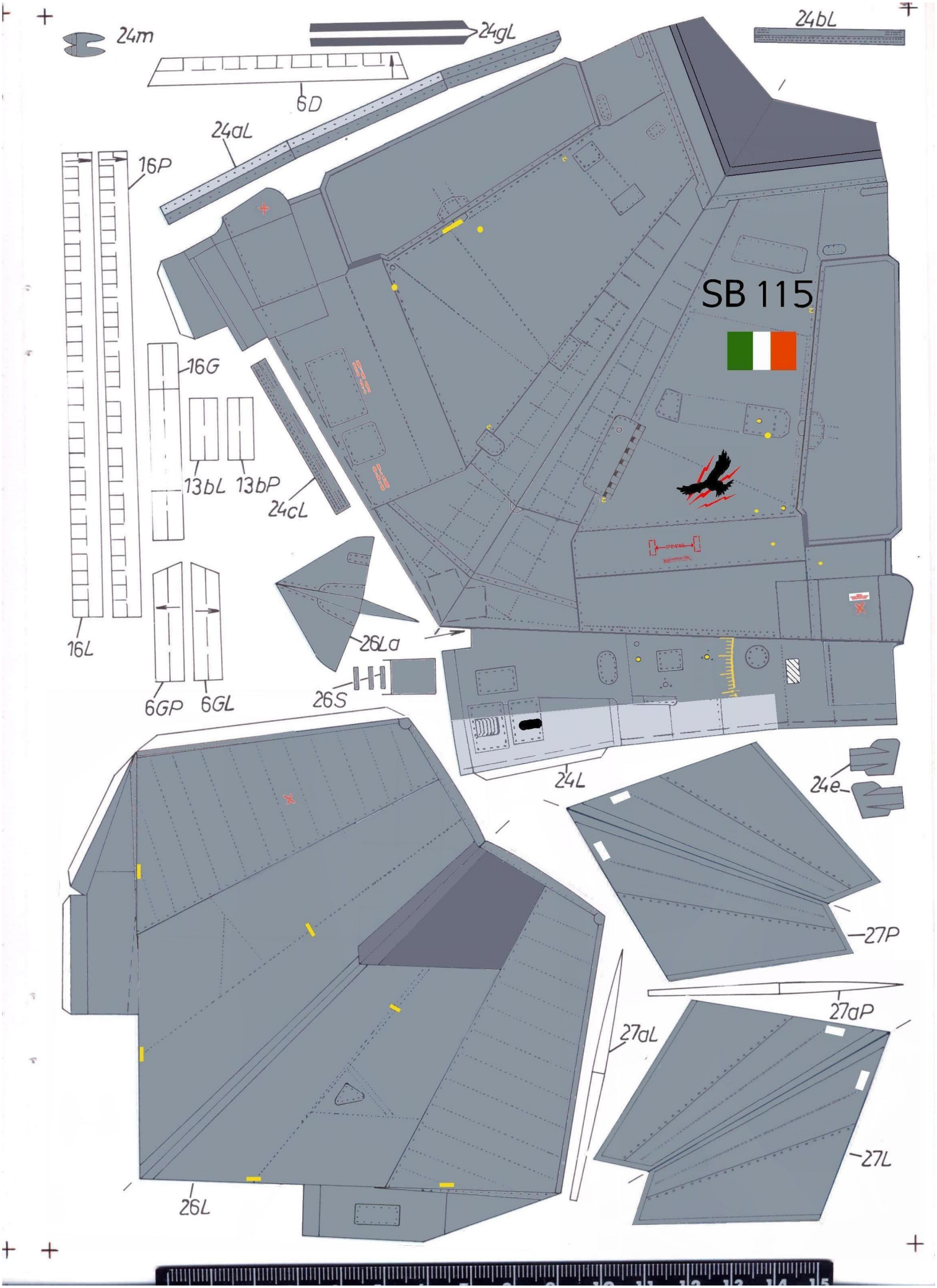
24m
24gL
24bL
6D
24aL
16P
SB 115
16G
13bL
13bP
24cL
16L
26La
6GP
6GL
26S
24L
24e
27P
27aP
27aL
27L
26L

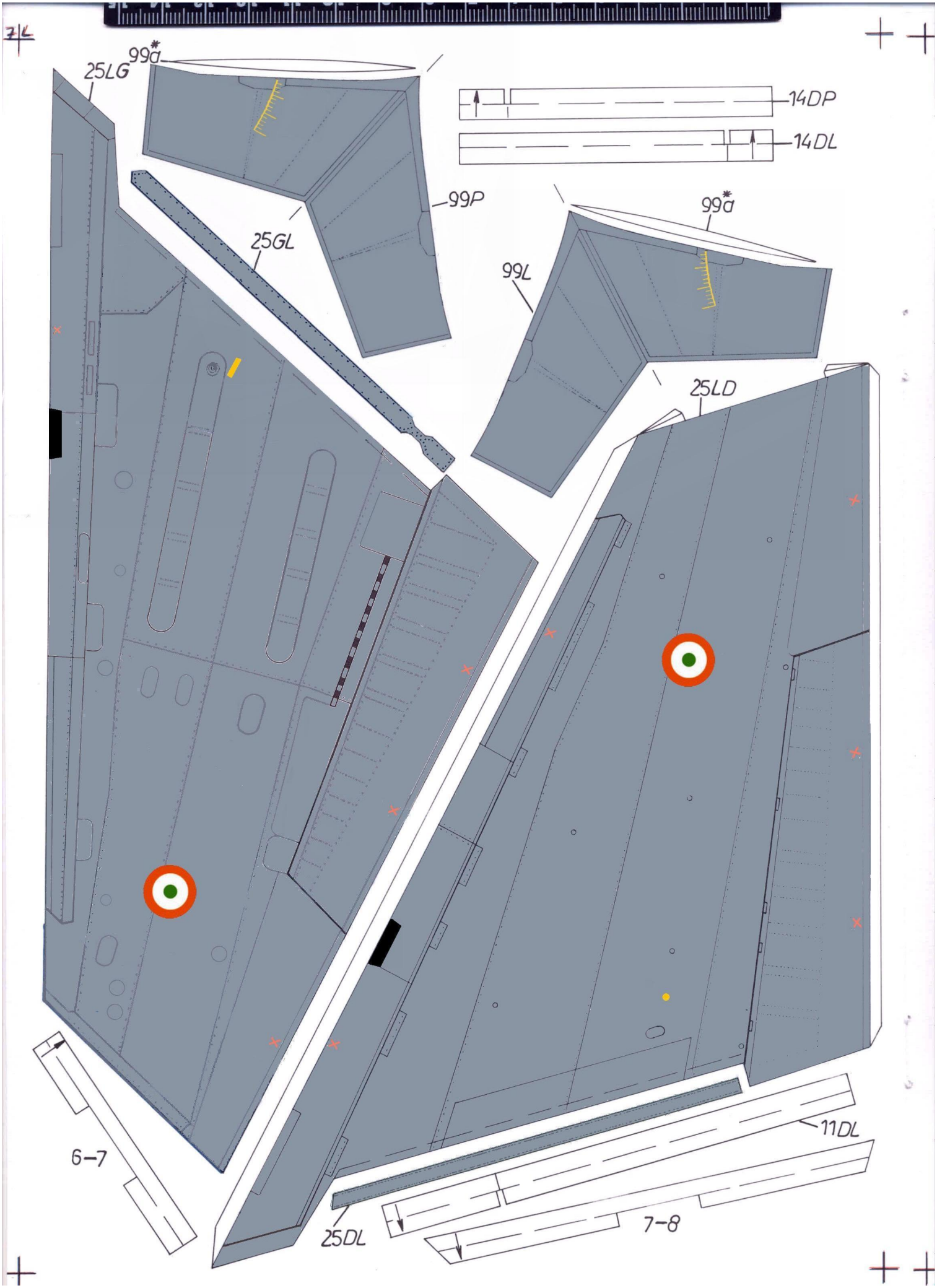
99*a
25LG
14DP
14DL
99P
25GL
99*a
99L
25LD
6-7
11DL
25DL
7-8

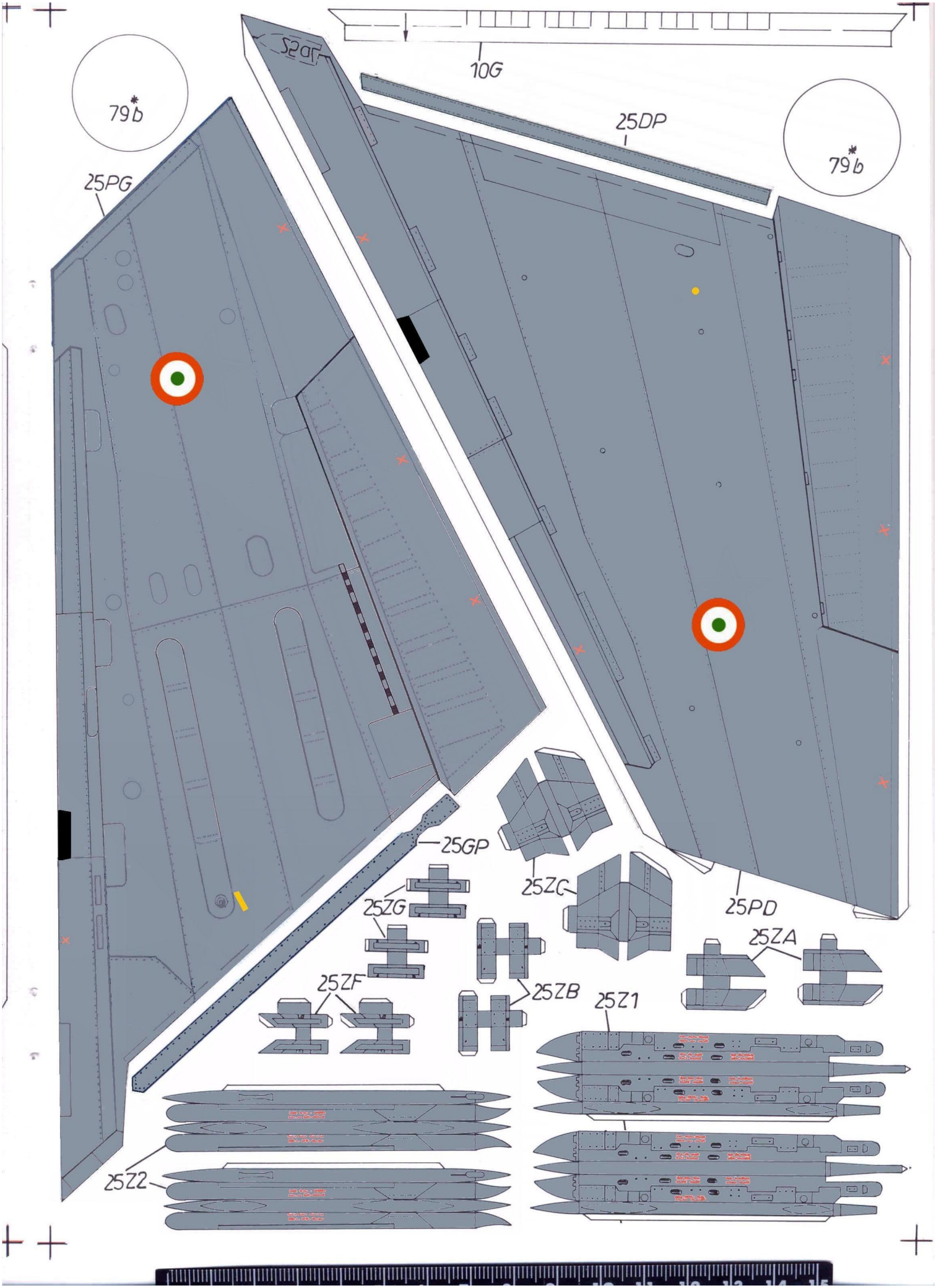

10G
79b
25DP
79b
25PG
25GP
25ZC
25PD
25ZG
25ZA
25ZF
25ZB
25Z1
25Z2

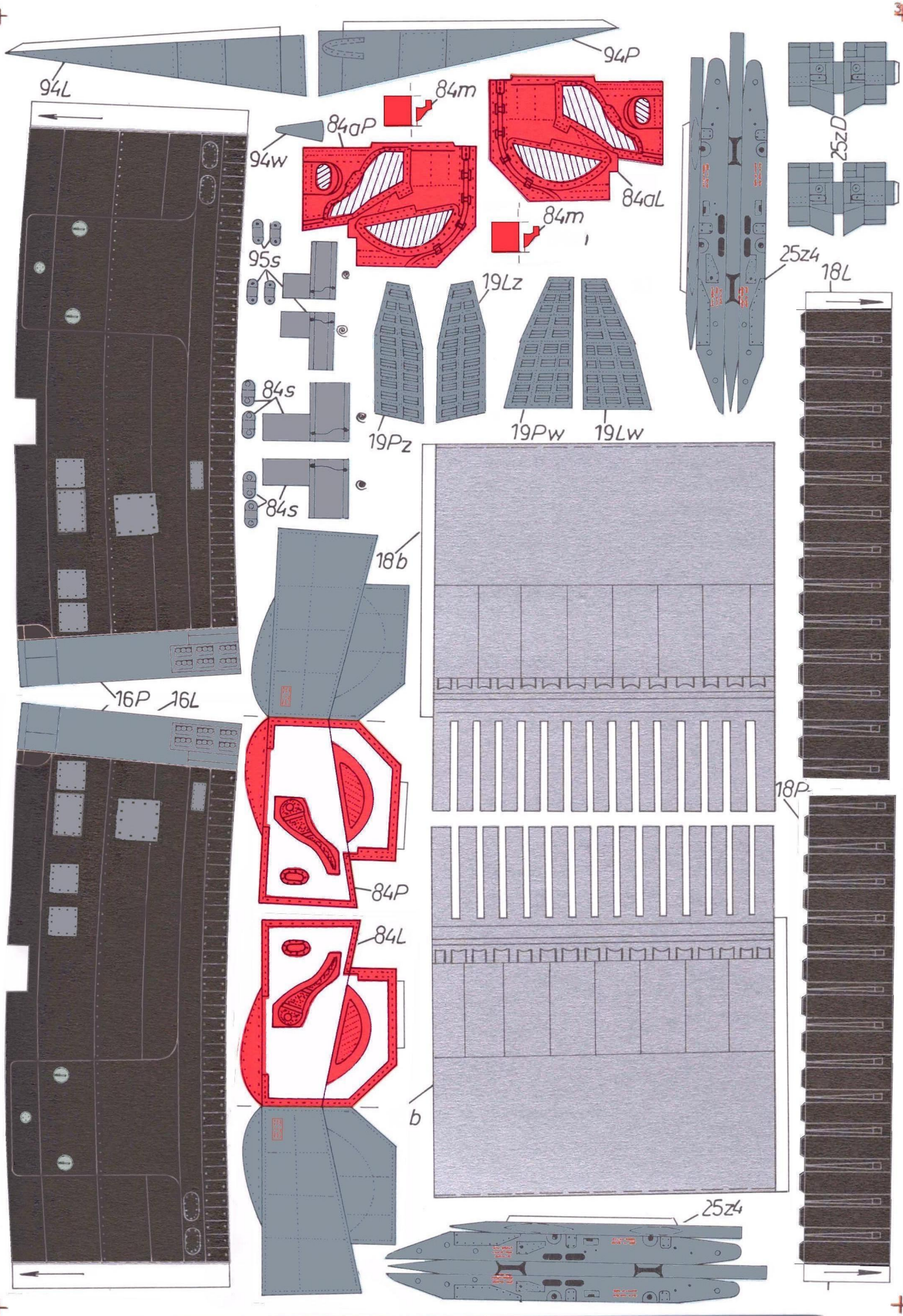
94L
94P
84m
84aP
94w
84aL
84m
25zD
95s
25z4
18L
19Lz
84s
19Pz
19Pw
19Lw
84s
18b
16P
16L
18P
84P
84L
b
25z4

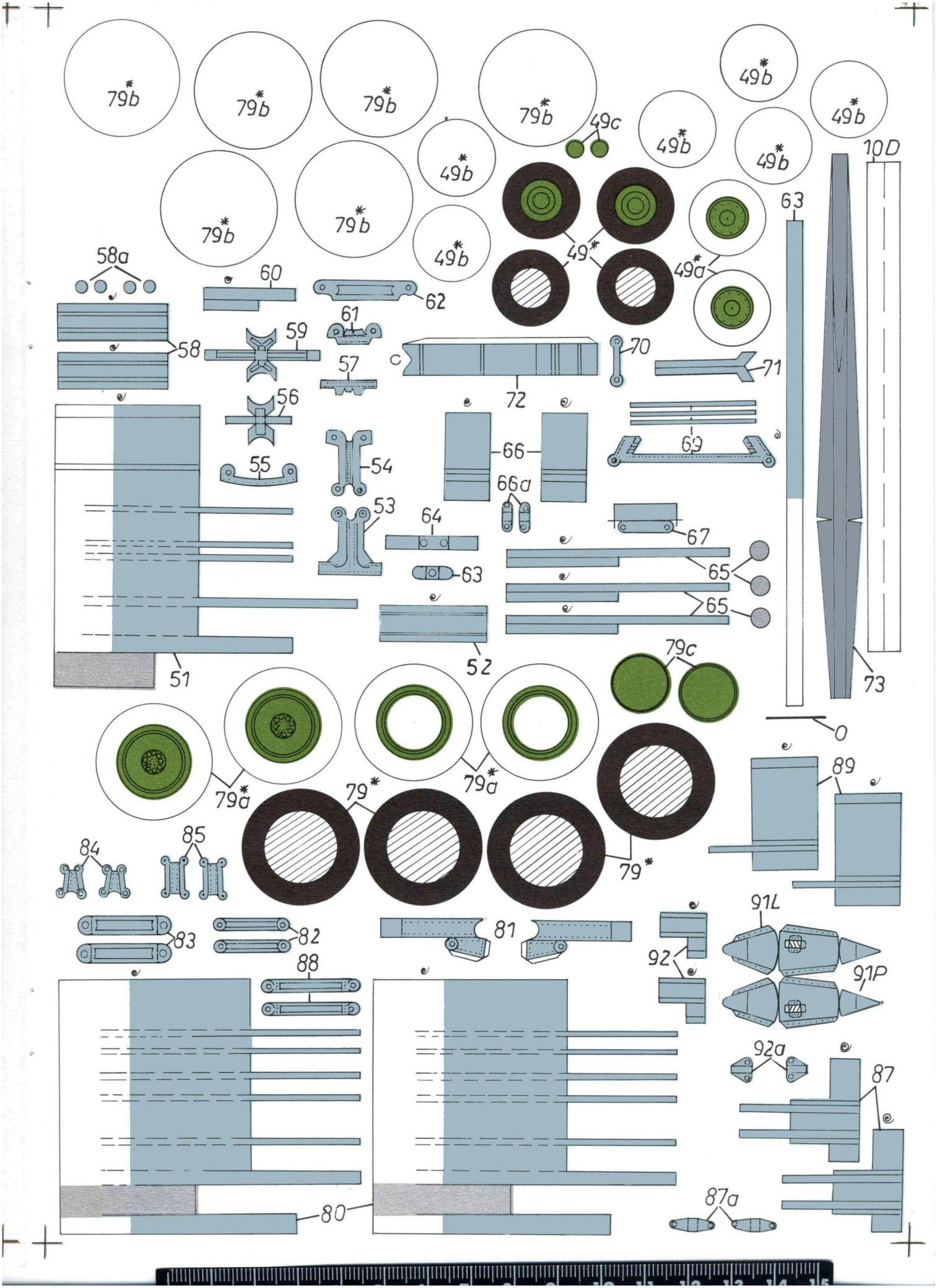
79b*
79b*
79b*
79b*
49b*
49b*
49c
49b*
49b*
49b*
10D
79b*
79b*
49b*
49*
49a*
63
58a
60
62
61
59
58
57
70
71
72
56
69
66
55
54
66a
53
64
67
63
65
65
52
51
79c
73
0
79a*
79a*
79*
79*
89
84
85
83
82
81
91L
92
91P
88
92a
87
87a
80

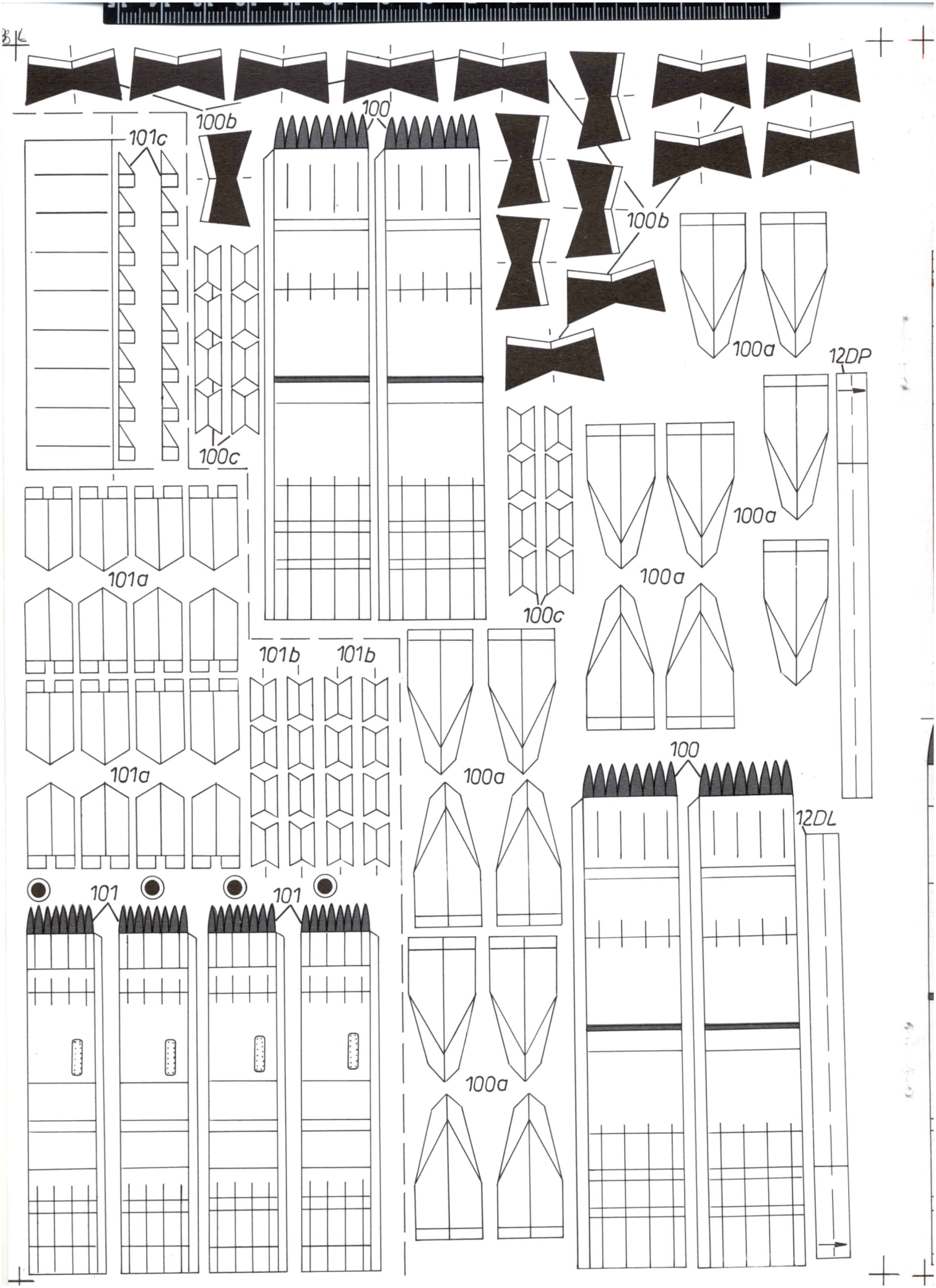
100b
100
101c
100b
100a
12DP
100c
100a
101a
100a
100c
101b
101b
100a
100
12DL
101
101
100a

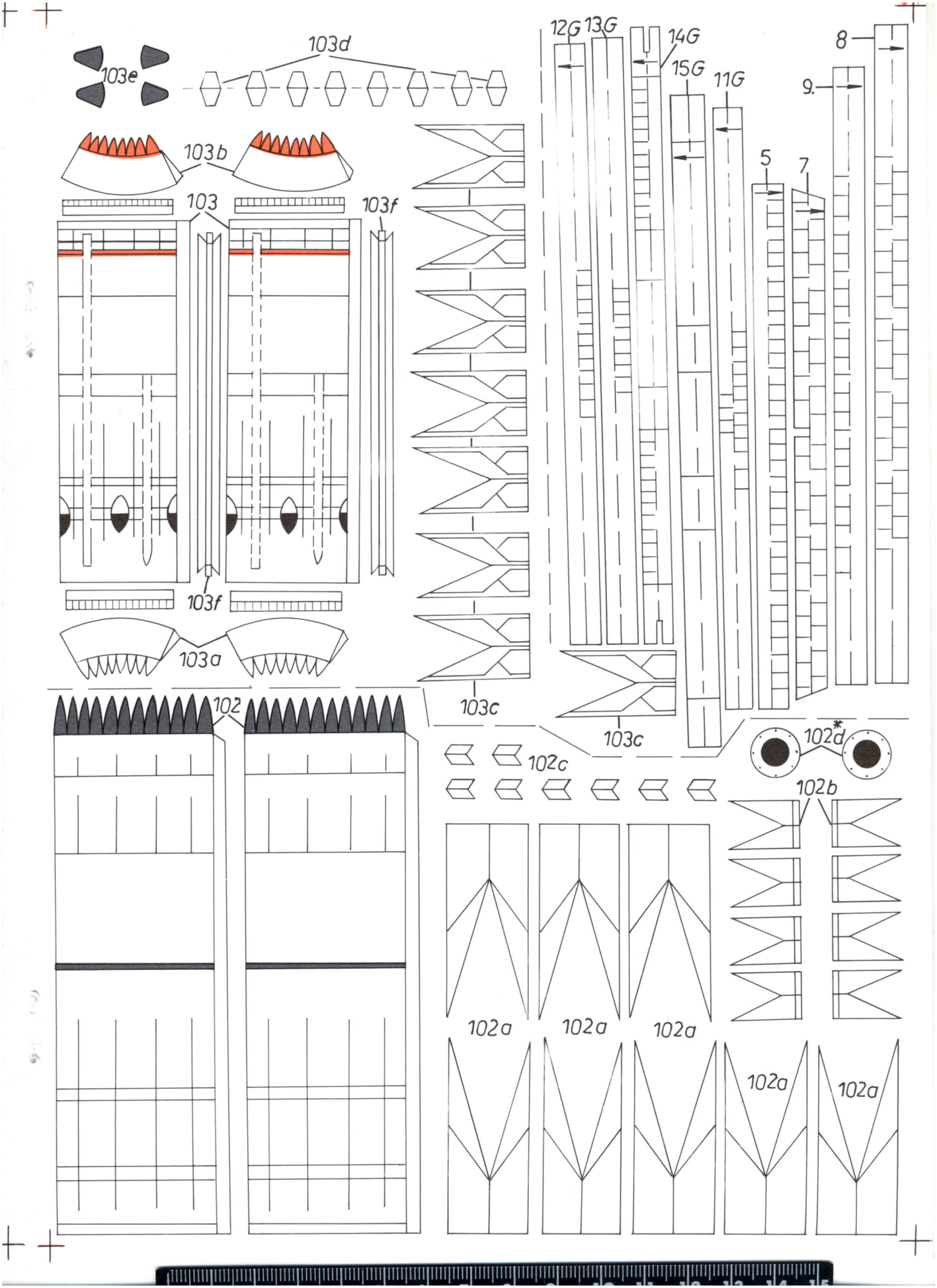
103d
103e
103b
103
103f
103f
103a
103c
103c
12G
13G
14G
15G
11G
8
9
5
7
102
102c
102d*
102b
102a
102a
102a
102a
102a

18*c
KP
KL
7*a
KP
SK-C
KL
24*b
SP*-P
10*a
SK-C
6*a
24*a
13DP
14*a
13DL
YL
SP*-L
YP*
SKAP
SKAL
XL
SK-AL
11*a
SK-AL
ZP
3*a
15*a
YL*
1*a
2*a
DT*-LL
DT*-PP
SK-AP
DT*-L
SK-AP
SK-AP
ZL
12*a
YP
XP
SK-C
18*c
8*a
SK-C
DT*-P
SK-AL
9*a

15a
14a
SK*-AP
13a
12a
7-8a*
15a
14a
SK*-AL
13a
12a
11a
10a
9a
8a
SK-G*
SK-D
19G
19G
16
16
11a
10a
9a
8a
KL*
12DP
13DP
13DP
14DP
16P
12DL
13DL
13DL
14DL
16L
16
16
19D*
11a
10a
6-7a*
SK*-C
9a
8a
7a
KP*
16a*
SK-G
SK-G
15
14
13
14
13
15
14a
16a
SK-D*
20a

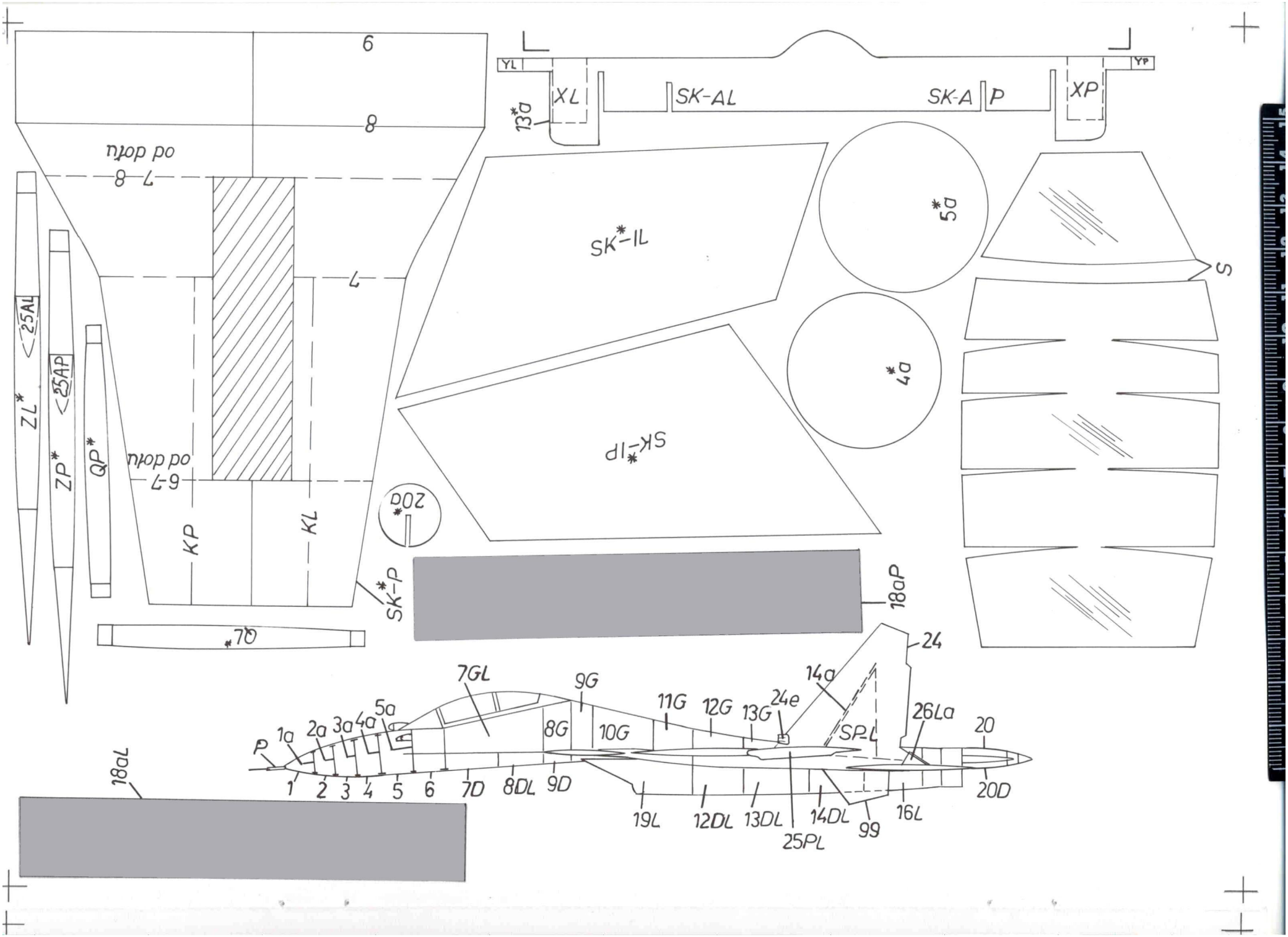

6
8
od dołu
7-8
7
od dołu
6-7
KP
KL
ZL*
ZP*
QP*
25AL
25AP
SK*-P
7Q*
20a*
SK*-IL
SK*-IP
5a*
4a*
YL
YP
XL
XP
SK-AL
SK-A
P
13a*
S
18aP
24
14a
24e
26La
20
20D
SP-L
7GL
9G
11G
12G
13G
8G
10G
5a
4a
3a
2a
1a
P
1
2
3
4
5
6
7D
8DL
9D
19L
12DL
13DL
14DL
25PL
99
16L
18aL

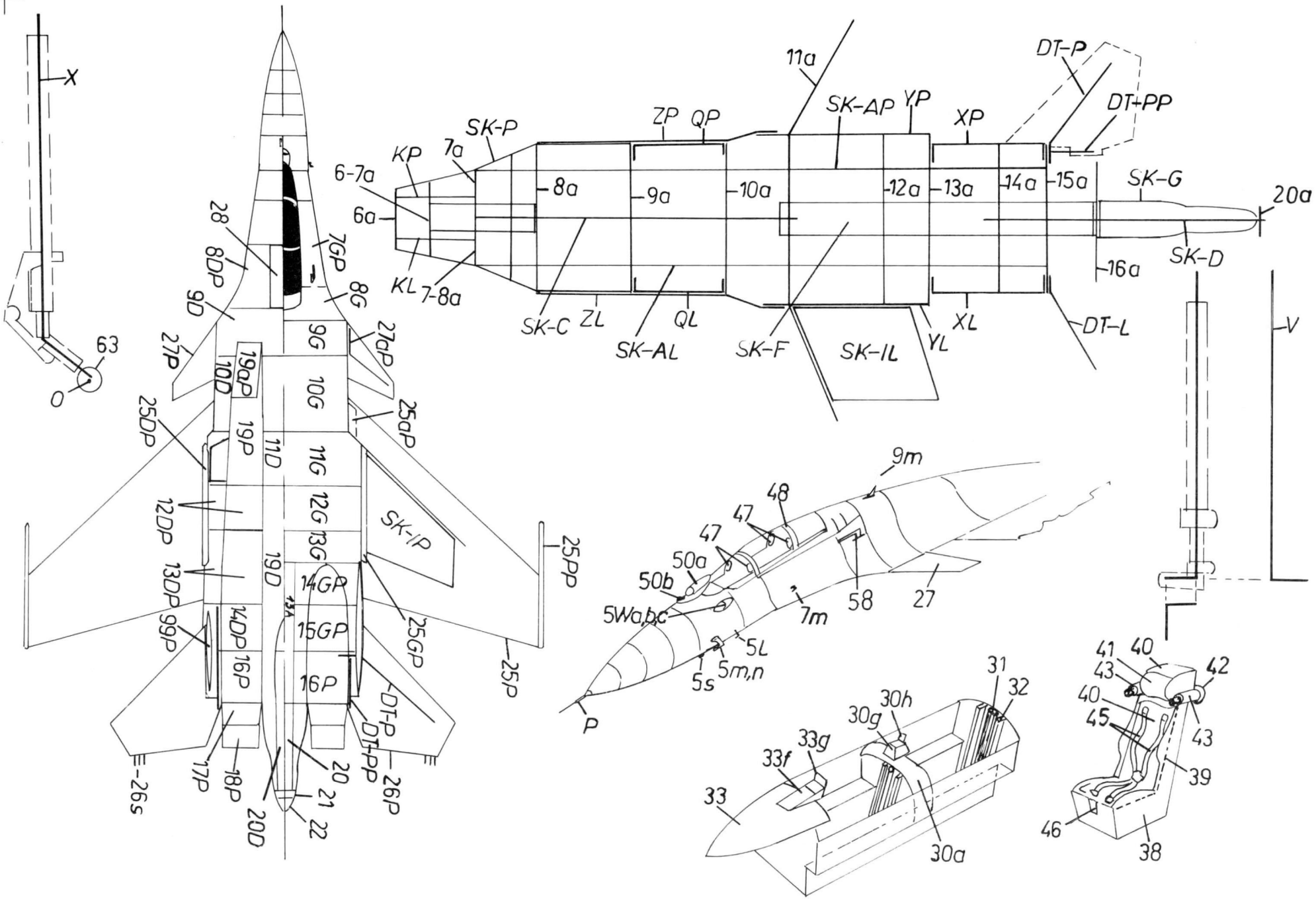
X
63
O
28
8DP
9D
27P
25DP
12DP
13DP
99P
17P
18P
-26s
7GP
8G
27aP
25aP
25PP
25GP
25P
26P
DT-P
DT-PP
20
21
22
20D
19aP
10D
19P
11D
19D
14DP
16P
9G
10G
11G
12G
13G
14GP
15GP
16P
SK-IP
6-7a
6a
KP
KL
7a
7-8a
SK-P
SK-C
ZP
ZL
QP
QL
SK-AL
8a
9a
10a
11a
SK-F
SK-AP
SK-IL
YP
YL
12a
13a
14a
15a
16a
XP
XL
DT-P
DT-PP
DT-L
SK-G
SK-D
20a
V
9m
48
47
47
50a
50b
5Wa,b,c
5L
5s
5m,n
7m
58
27
P
31
32
30h
30g
33g
33f
33
30a
41
40
43
42
40
45
43
39
46
38

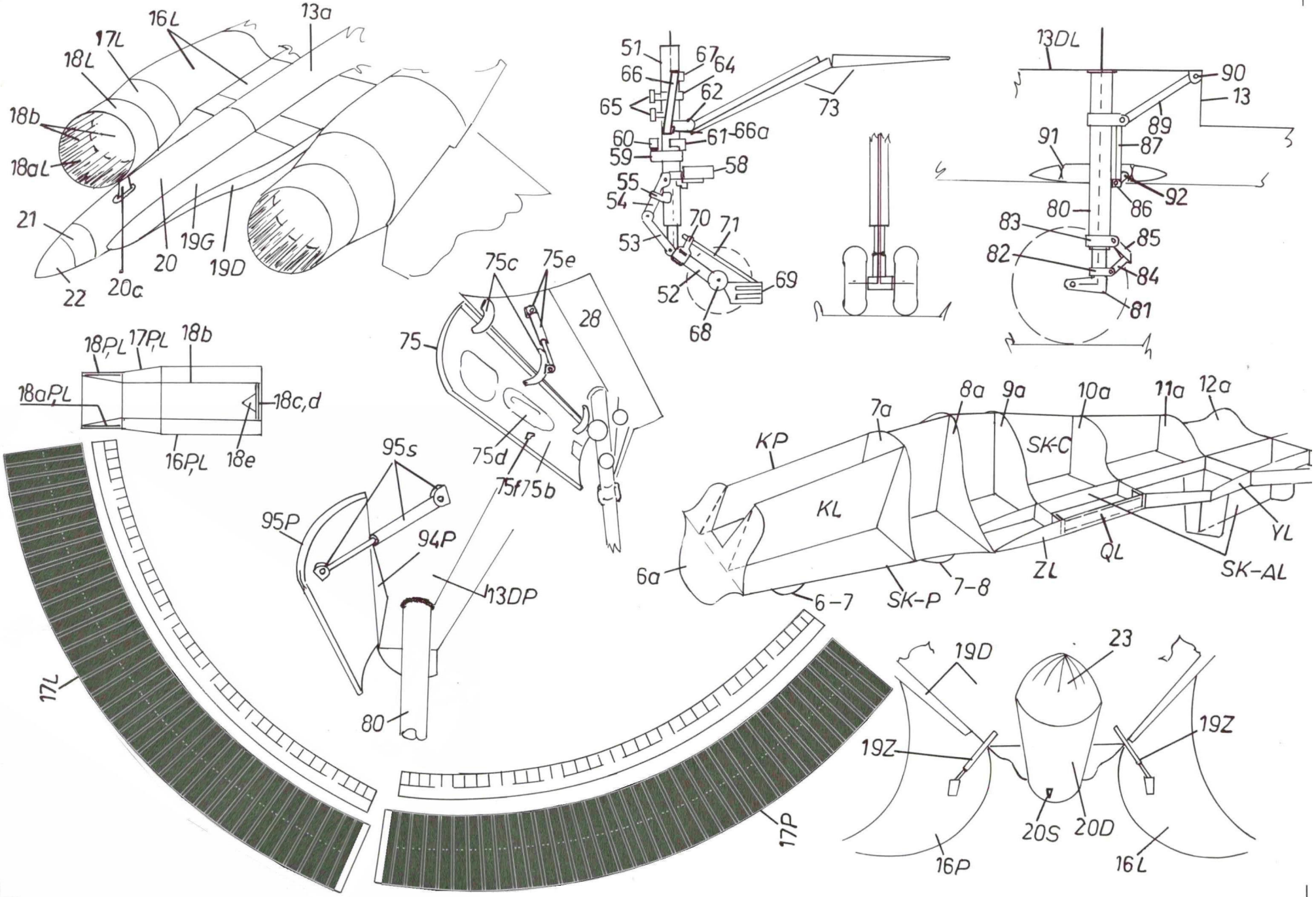
16L
13a
17L
18L
18b
18aL
21
22
20c
20
19G
19D
51
67
64
66
62
65
73
60
61
66a
59
58
55
54
70
71
53
52
69
68
13DL
90
13
89
91
87
92
86
80
83
85
82
84
81
18P,L
17P,L
18b
18aP,L
18c,d
16P,L
18e
75c
75e
28
75
75d
75f
75b
95s
95P
94P
13DP
80
KP
7a
8a
9a
10a
11a
12a
SK-C
KL
6a
6-7
SK-P
7-8
ZL
QL
YL
SK-AL
17L
17P
19D
23
19Z
19Z
20S
20D
16P
16L

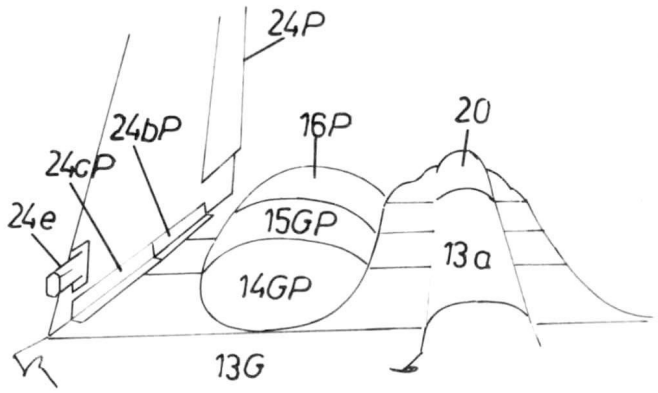
24P
24bP
24cP
24e
16P
20
15GP
14GP
13a
13G

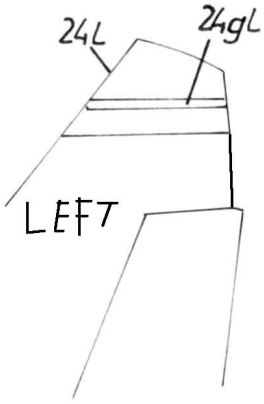
24L
24gL
LEFT

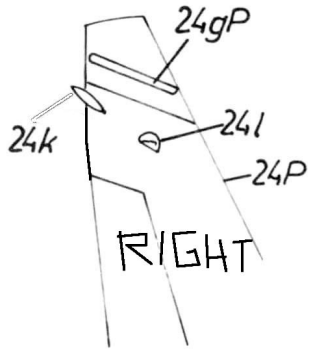
24gP
24k
24l
24P
RIGHT

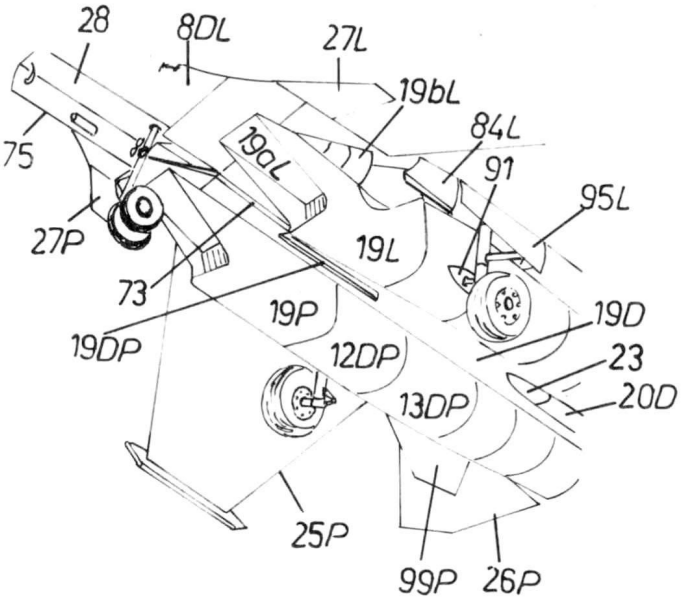
28
8DL
27L
19bL
84L
75
19aL
91
95L
27P
19L
73
19P
19D
19DP
12DP
23
20D
13DP
25P
99P
26P

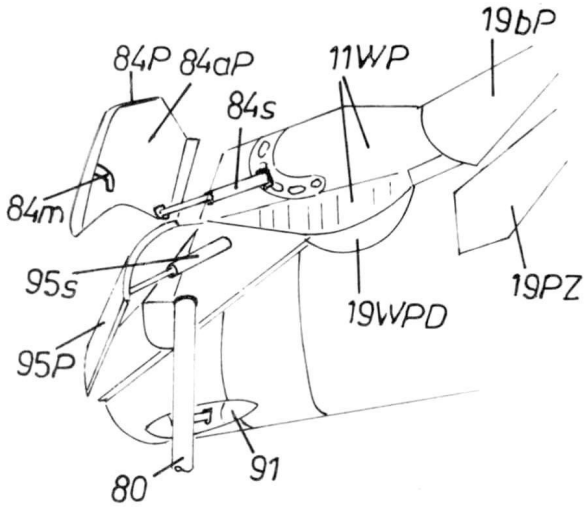
19bP
84P
84aP
11WP
84s
84m
95s
19WPD
19PZ
95P
80
91

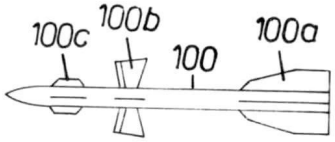
100c
100b
100
100a

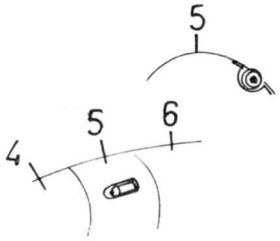
5
5
6
4

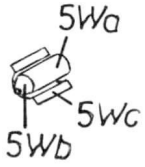
5Wa
5Wc
5Wb

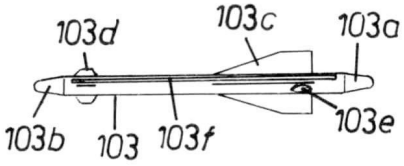
103d
103c
103a
103b
103
103f
103e

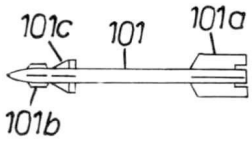
101c
101
101a
101b

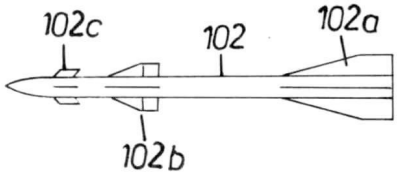
102c
102
102a
102b

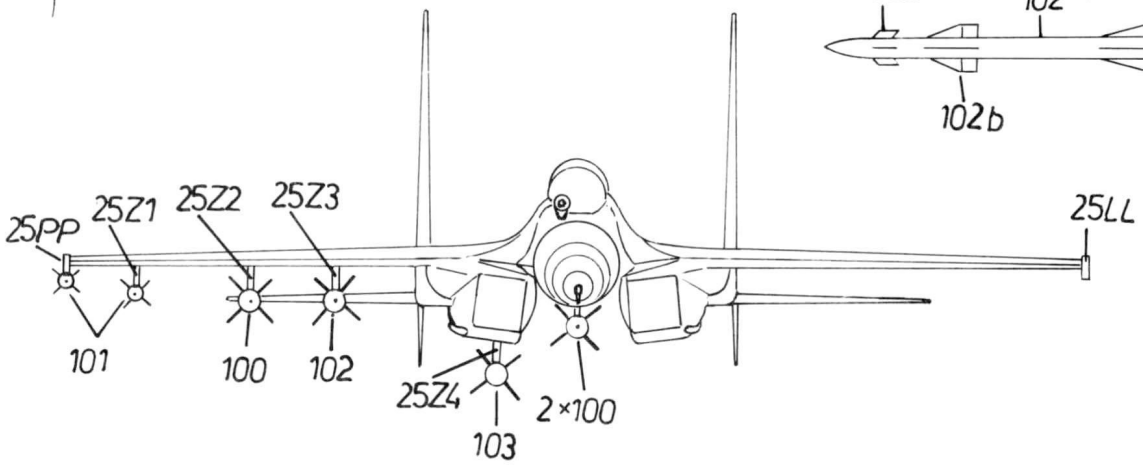
25PP
25Z1
25Z2
25Z3
25LL
101
100
102
25Z4
2×100
103

SB 110

SB 110

REFERENCE :

REFERENCE :

REFERENCE :

REFERENCE :

REFERENCE :

REFERENCE :

REFERENCE :

REFERENCE :

REFERENCE :

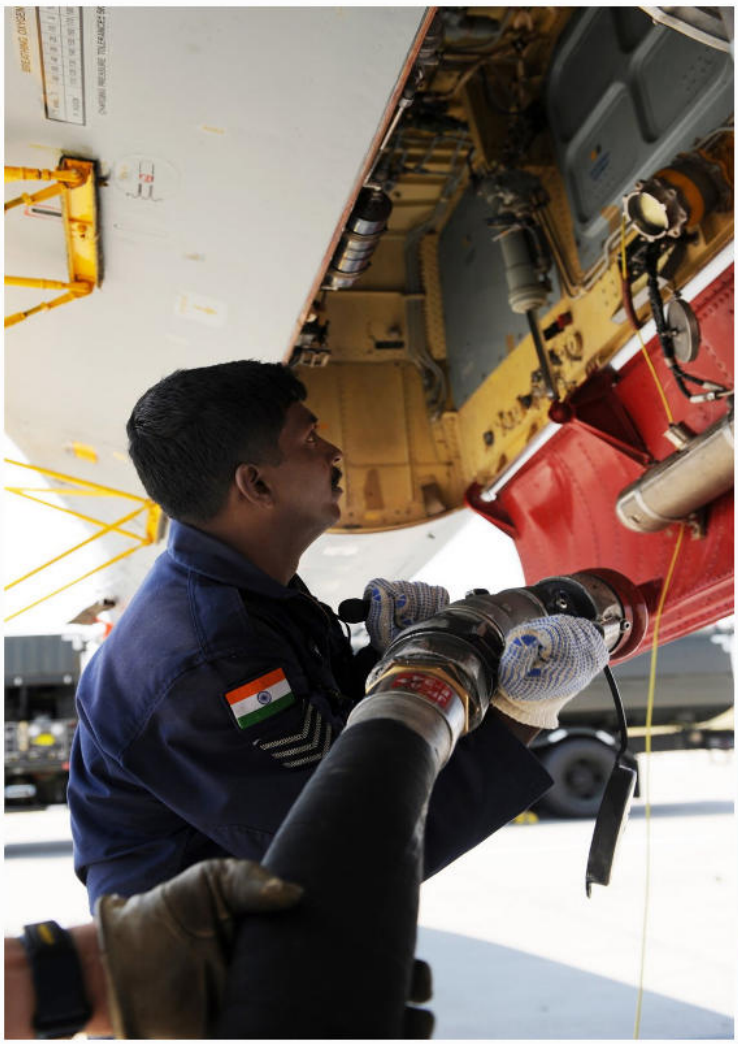

REFERENCE :

Photo © 2002
Raghuram D.S.S.R

Photo © 2002
Sushanth Kondi

Photo © 2002
Sushanth Kondi

Photo © 2002 Sushanth Kondi

REFERENCE :

Photo © 2002
Raghuram D.S.S.R

Photo © 2002 Sushanth Kondi

Photo © 2002
Sushanth Kondi

Photo © 2002 Sushanth Kondi